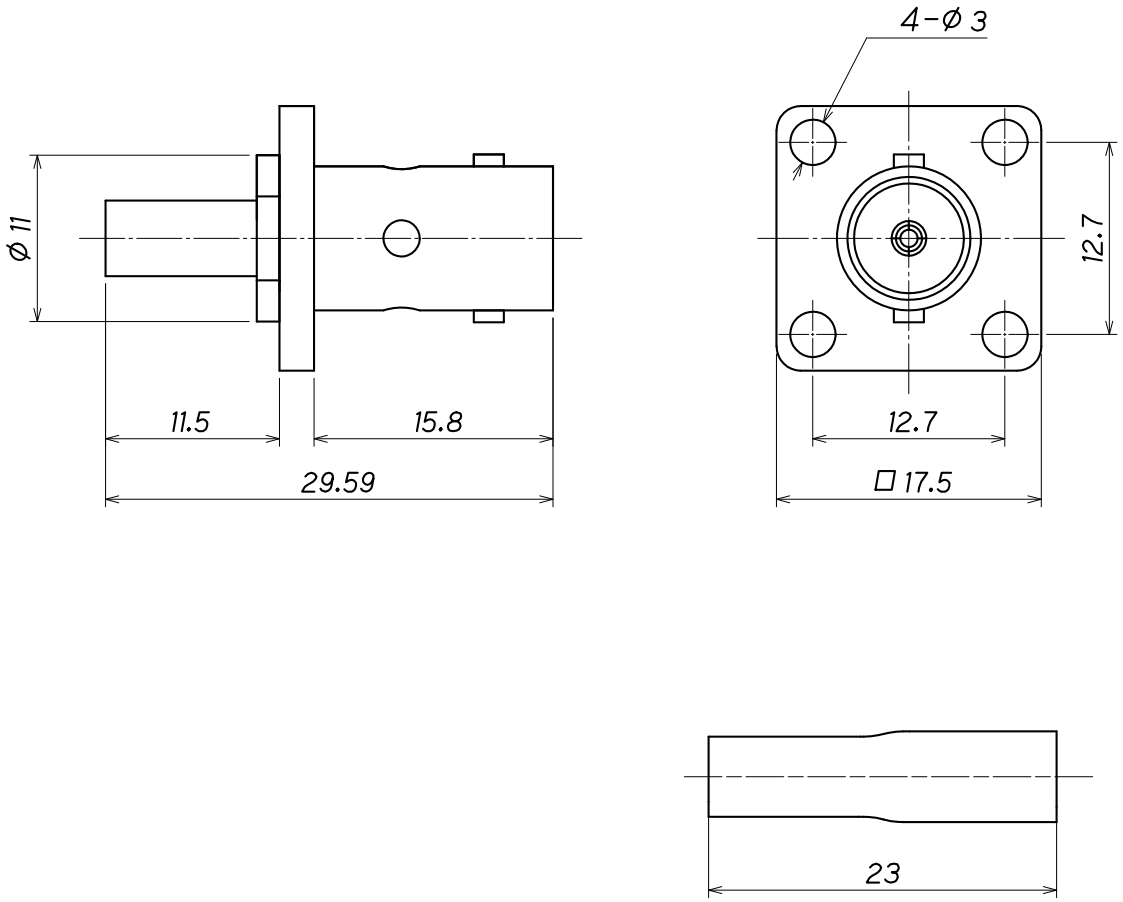
4-Ø 3
Ø 11
12.7
11.5
15.8
29.59
12.7
□ 17.5
23